Graesslin Mechanical Time Switch - 24-Hour 120V Electromechanical Flush Mount Timer Module, 15 Minute Intervals, 21A, SPDT

Item MIL72ESTUZ-120

PRODUCT DESCRIPTION

The MIL72 series time switches are designed to be mounted inside a control panel and can accommodate surface/DIN rail or flush panel mounting. The MIL72 series is a light duty commercial time switch for 12-24 VAC/VDC, 120 or 208/240 VAC single-phase applications.

FEATURES

- 21 A SPDT switch
- Synchronous drive or quartz drive (Q Models) with self-recharging battery backup
- 72-hour carry-over battery backup on Q models
- Captive trippers with 15-minute intervals
- Available with or without override
- True clock face, easy-to-set
- Surface/DIN rail or flush mount
- Clear plastic dust cover
- Compact size

APPLICATIONS

- Refrigeration Merchandiser
- Air Movement & Ventilation
- Aeration
- Septic Treatment
- Generator Exercising

TECHNICAL DATA

General	
Model Number	MIL72ESTUZ-120
Description	24-Hour 120V Electromechanical Flush Mount Timer Module, 15 Minute Intervals, 21A, SPDT
UPC Code	078275153448
Brand	Domestic Intermatic
Country of Origin (Intermatic)	MEXICO
Warranty Period	1-Year limited

Control Specifications	
Maximum Cycle Time	24 hrs
Timing Interval	15 min
Clock Drive Type	Synchronous
Mechanism Type	Electromechanical
Has Captive Trippers	Yes
Has Real-time Clock Face	Yes
Application Compatibilities	Incandescent; Fluorescent; CFL; LED

Mechanical Specifications	
Mounting Options	Flush

Dimensions

Product Dimensions (H x W x D) in	2 39/64 x 2 53/64 x 1 23/64 in
Cut-Out Width (In)	2 5/8
Cut-Out Height (in)	2 5/8
Cut-Out Height (mm)	66

Load Ratings

Motor	1 HP, 120 VAC; 2 HP

Electrical Specifications

Maximum Power Consumption (VA)	0.5
Wiring Option	1/4" Quick connect terminals
Switch Type	SPDT

Display and Format

Shortest switching time	ON/OFF 15 minutes

Packaging

Unit Carton Dimensions (H x W x L) in	2.25 x 3.25 x 3.25 in

Environmental Specifications

Operating Humidity	0 to 95%, Non-condensing
Temperature (operation)	-40 °F to 185 °F / (-40 °C to 85 °C)

Standards and Certifications

CSA Certification	cCSAus
Other Certifications and Compatibilities	cRUus; CE
California Proposition 65	None

© 12/22/2022
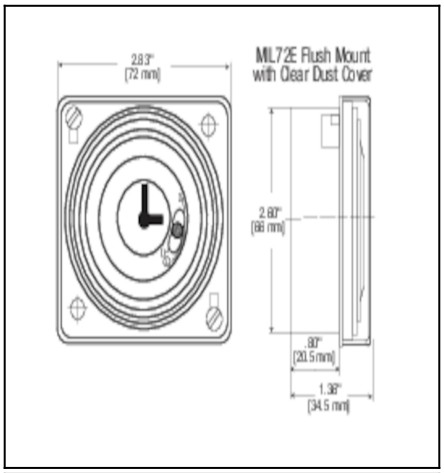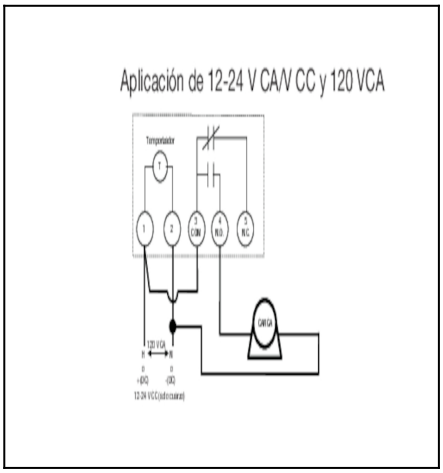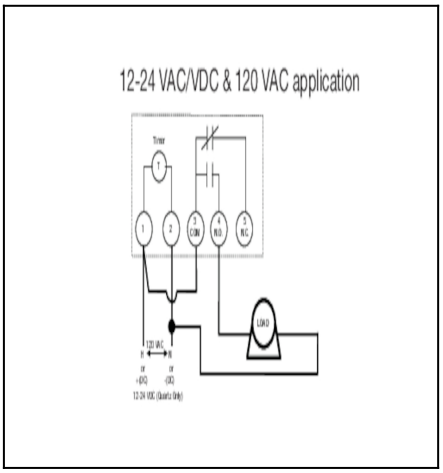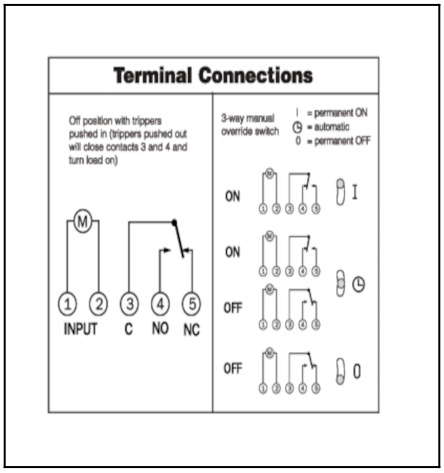
DRAWINGS AND DIAGRAMS